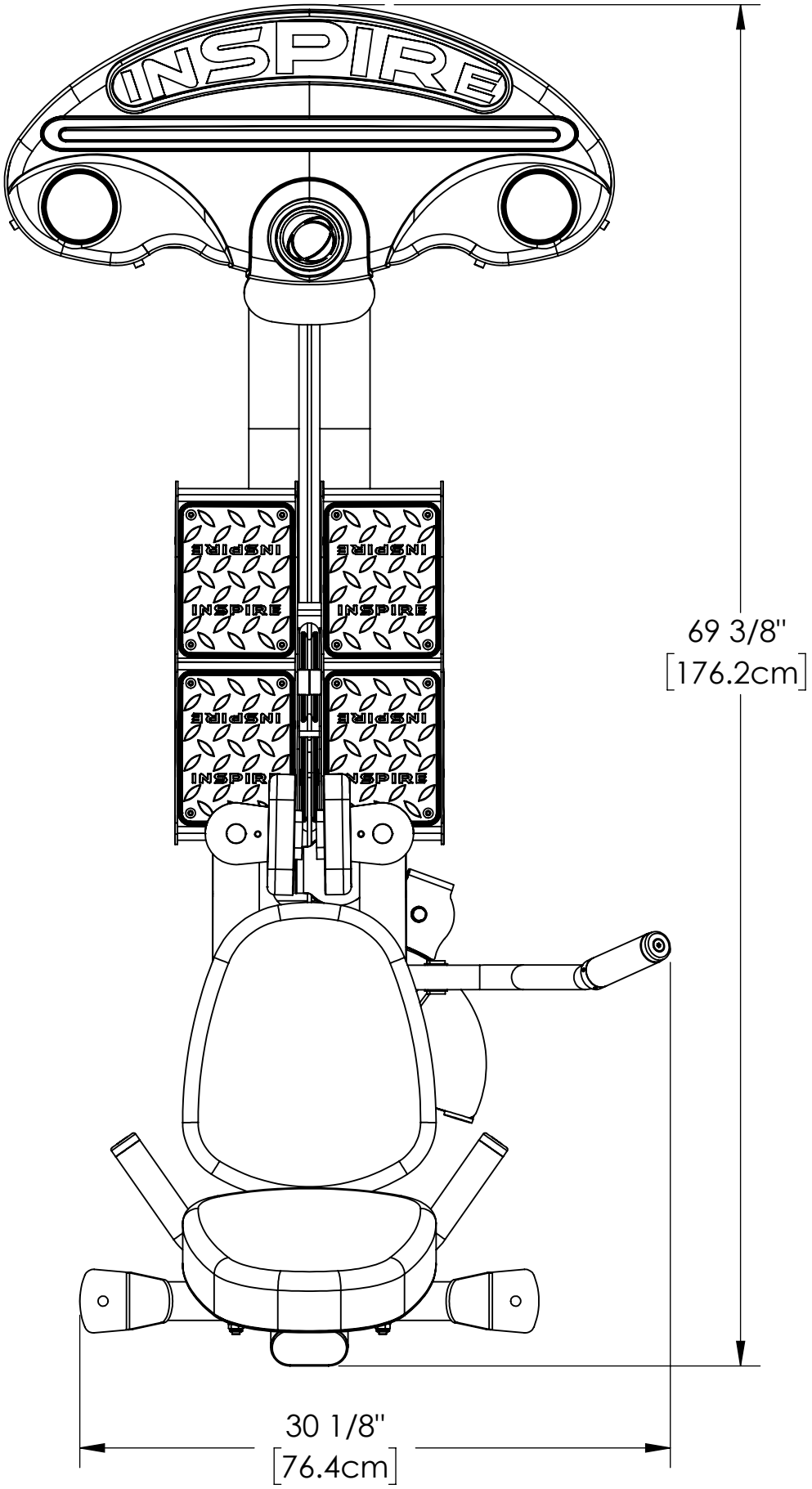
INSPIRE
69 3/8"
[176.2cm]
30 1/8"
[76.4cm]